GEFRAN

WPL

CONTACTLESS MAGNETOSTRICTIVE LINEAR POSITION TRANSDUCER (IO-LINK OUTPUT)

4.0 READY

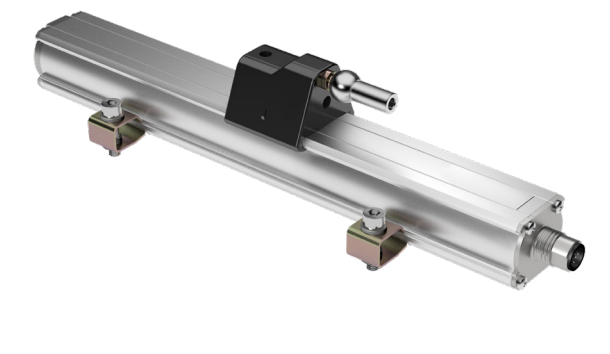

HYPERWAVE
HIGH-PERFORMANCE MAGNETOSTRICTIVE TECHNOLOGY

CE

Contactless linear position transducer with **HYPERWAVE** magnetostrictive technology. The absence of electrical contact on the cursor eliminates all wear and guarantees almost unlimited life. High accuracy of the mesurement with reference to the non linearity, repeatability and hysteresis. High resistance to vibrations, mechanical shocks, wide working temperature range. High performance in terms of environmental IP protection and EMC immunity, for use in a harsh industrial environment.

Main characteristics

- *Optimised mechanical structure*
- *Strokes from 50 to 4000mm*
- *Position and speed measurement (optional)*
- *Quick mounting via steel bracket*
- *Magnetic Slide or Floating Cursor*
- *Vibration resistance (DIN IEC68T2/6 15g)*
- *Environmental protection IP67*
- *Operating temperature: -30...+85°C*
- *Electromagnetic Compatibility EMC 2014/30/EU*
- *Compliance with RoHS Directive 2011/65/EU*
- *Power supply range 18...30 Vdc*
- *IO-Link interface V1.1*
- *Transfer speed COM3 (230.4kBaud)*

IO-Link

The **WPL series** with digital interface **IO-Link V 1.1** is a **"Smart"** device specifically designed to meet the demands of the **"Industry 4.0"** world. In addition to the process variables (position/speed), the sensor provides auxiliary acyclic information (diagnostics/statistics), which promotes optimal machine management. WPL also has settings and configuration functions for easy installation within the process.

TECHNICAL DATA	
Model	From 50 to 4000 mm
Number of magnets	1
Measurement taken	Displacement / Speed
Measuring principle	Magnetostrictive
Position read sampling time (typical)	1 ms
Shock test DIN IEC68T2-27	100g - 11ms - single shock
Vibrations DIN IEC68T2-6	15g / 10….2000Hz
Velocità di spostamento	≤10 m/s
Position data resolution (selectable)	5,10,20,50,100 µm
Speed data resolution	0.5 mm/sec
Max. acceleration	≤ 100 m/s² displacement
Cursor (see note)	Sliding cursor Floating separate cursor
Working temperature	-30...+85°C
Storage temperature	-40...+100°C
Coefficient of temperature	25 ppm FS/°C
Protection	IP67

Note: For strokes > 2500mt, use sliding or floating cursors at a maximum height of 4mm

CERTIFICATIONS
CE
EAC
cULus (pending)

ELECTRICAL DATA	
Communication interface	IO-Link
Protocol	V 1.1
Profile	Generic Smart sensor
Data Transmission rate	COM3 (230.4 kBaud)
Type of position data	32 bit signed
Speed data type	16 bit signed
Connector	M12 5 pin
Rated power supply	18…30Vdc
Max ripple voltage	1 Vpp
Max absorption (*)	1 W
Electric insulation	500 Vdc
Reverse polarity protection	YES (-30 Vdc)
Over-voltage protection	YES (36 Vdc)
EMC	EN 61326-1 EN 61326-2-3 IO-Link EMC Specs
SIO mode	YES
SSCs (Switching Signal Channel)	YES (nr. 2 optional)
Class required for Master port	A
Min. Cycle Time	1 mS

(*) Does not take into account absorption on DO in SIO mode (limited to 200 mA)

MECHANICAL DIMENSIONS

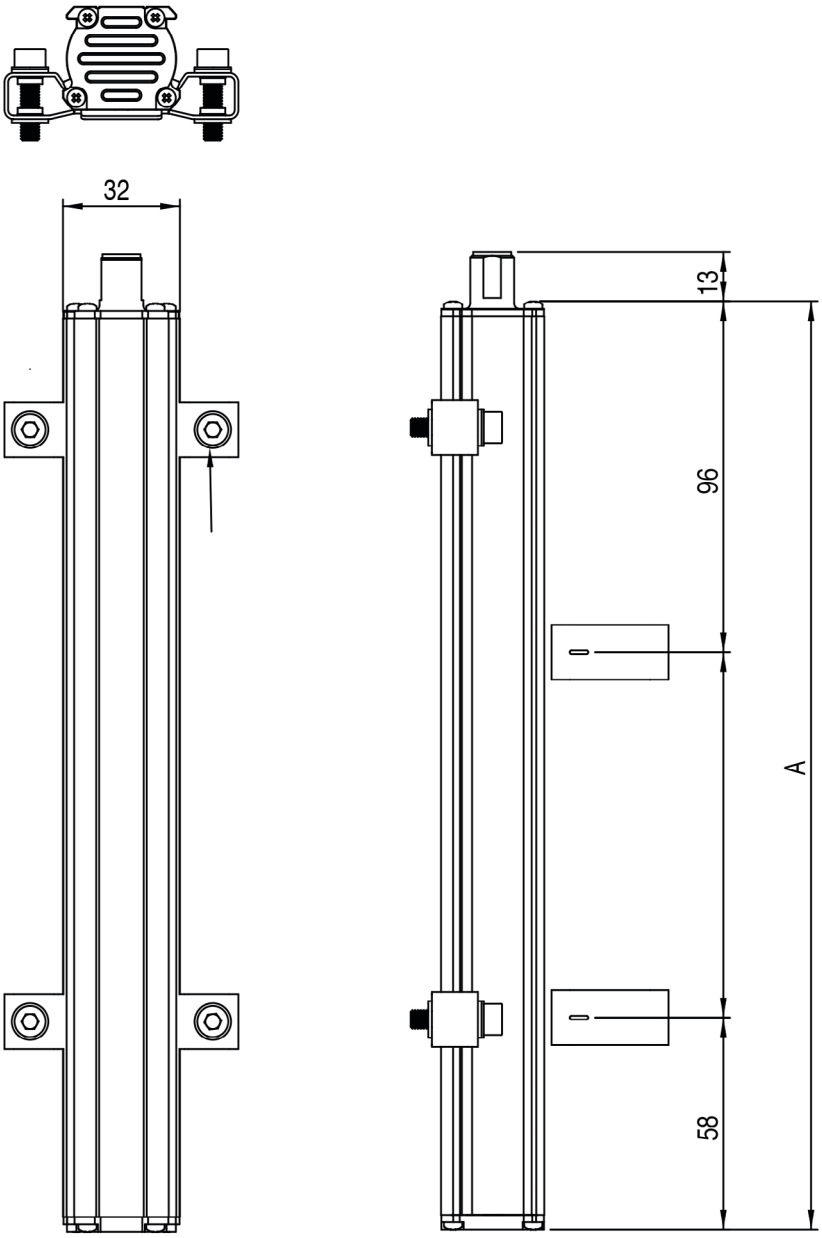

ELECTRICAL / MECHANICAL DATA

Model		50	75	100	130	150	350	360	400	450	500	550	600	650	1200	1250	1300	1400	2250	2500	2750	3000	3250	3500	3750	4000
		175	200	225	250	300	700	750	800	850	900	950	1000	1100	1500	1750	2000									
Sampling time	ms	0,5					1								1,5				2				3			
Electrical stroke	mm	**Model**																								
Independent linearity	± %/FS	Typical: ≤ ± 0,02 % FS (min ± 0,060 mm) with sliding cursor Typical: ≤ ± 0.02 % FS with floating cursor (value depends on the distance between cursor and sensor body)																								
Max. dimensions (A)	mm	**Model + 154**																								
Repeatability	mm	<0,02 (limited by the resolution of the output value)																								
Hysteresis		< ± 0,005% FS (minimum 0,010 mm)																								

ELECTRICAL CONNECTIONS

5 pin M12x1 connector	M12x1 5 pin Connector	IO-LINK Output
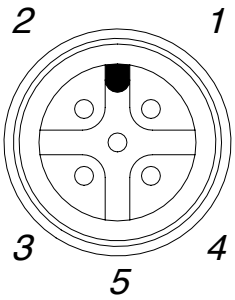	1	V+
	2	DO (*)
	3	V-
	4	IO-Link
	5	N.C.

• (*) DO = digital output only active in SIO mode

IO-Link OUTPUT

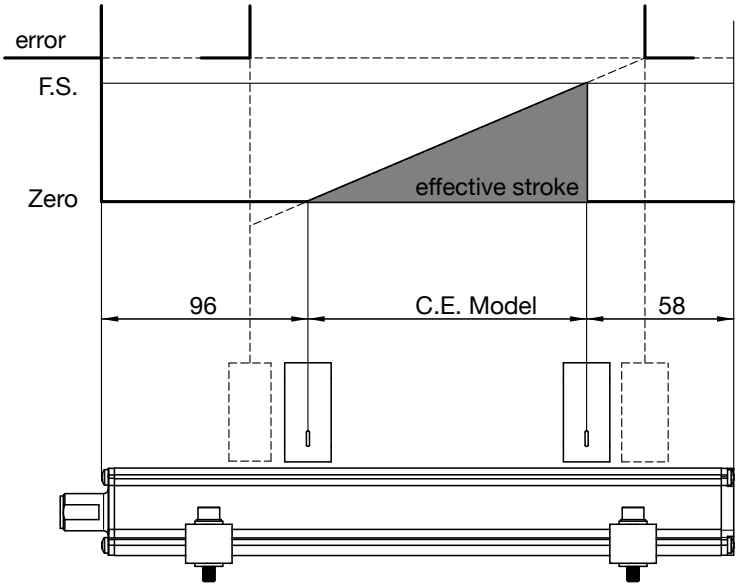

ORDER CODE

Position transducer

W	P	L	A						0	0	0	0	X	X	0	0	X	0	0	X	0	X	X

Interface	
IO-Link	**L**

Connector	
M12x1 (5 pin)	**A**

Stroke

Output	
A	Position
B	Position /SSCs (*)
C	Position /Speed
D	Position /SSCs/Speed

Mechanical and/or electrical characteristics differing from those in the standard version may be arranged on request.

(*) Switching Signal Channel

Es.: WPL-A-0400 0000-X-X-0-0-X-00-X-0-XX
Transducer model WPL-I, IO-Link output, connector A, model 400

CURSORS ON REQUEST

PCUR202/PCUR230

Floating Cursor

PCUR210

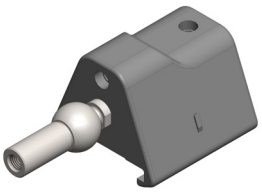

Sliding cursor,
axial joint low

PCUR211

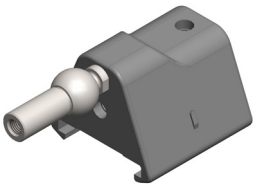

Sliding cursor,
axial joint high

PCUR212

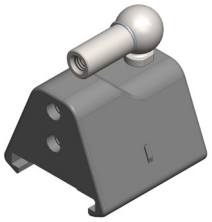

Sliding cursor,
axial joint angle

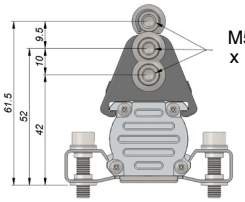

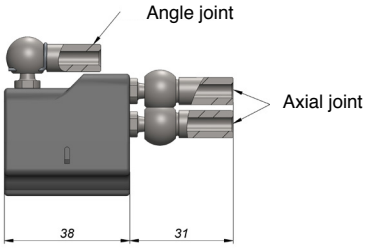

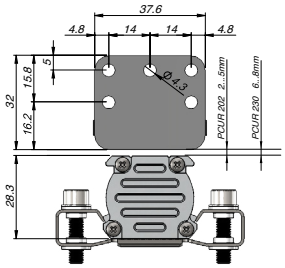

BRACKETS ON REQUEST

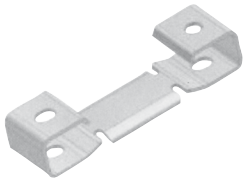

P K I T

Brackets (2 brackets for every kit)	
Steel brackets, interaxis 42.5mm	**090**
Steel brackets, interaxis 50mm	**091**

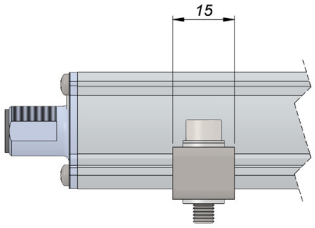

Brackets code	Interaxis (i)	Screw (V)	Dimension (A)
PKIT090	42.5	**M4**	**56**
PKIT091	50	**M5**	**63.5**

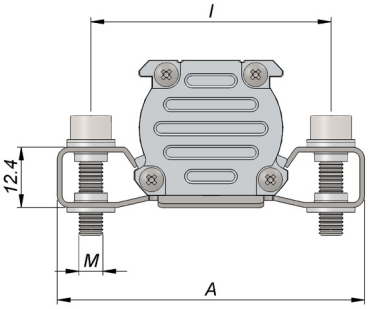

ACCESORIES

Connectors
5 pin female connector **CON031**
5-pin female connector, 90° angle **CON041**

IO-Link Cables
2m unshielded cable with straight 5-pin M12 female connector and straight 5-pin M12 male connector **CAV501**
5m unshielded cable with straight 5-pin M12 female connector and straight 5-pin M12 male connector **CAV502**
10m unshielded cable with straight 5-pin M12 female connector and straight 5-pin M12 male connector **CAV503**

Master IO-Link
Gefran has analysed and therefore qualified the main masters on the market that comply with the IEC 61131-9 Standard regarding the IO-Link 1.1 digital communication interface, and therefore compatible with WPL transducers.

Note: For further information (order codes, technical specifications, etc.) please contact Gefran or write to: *info@gefran.com*.

Electrical installation requirements and Conformity certificate are available on our web site: www.gefran.com
GEFRAN spa reserves the right to make aesthetic or functional changes at any time and without notice

GEFRAN spa
via Sebina, 74
25050 PROVAGLIO D'ISEO (BS) - ITALIA
ph. 0309888.1 - fax. 0309839063
Internet: http://www.gefran.com